REVISIONS				
REV.	DESCRIPTION	MD WO #	DATE	BY
A	Released	W05968	3/2018	CS

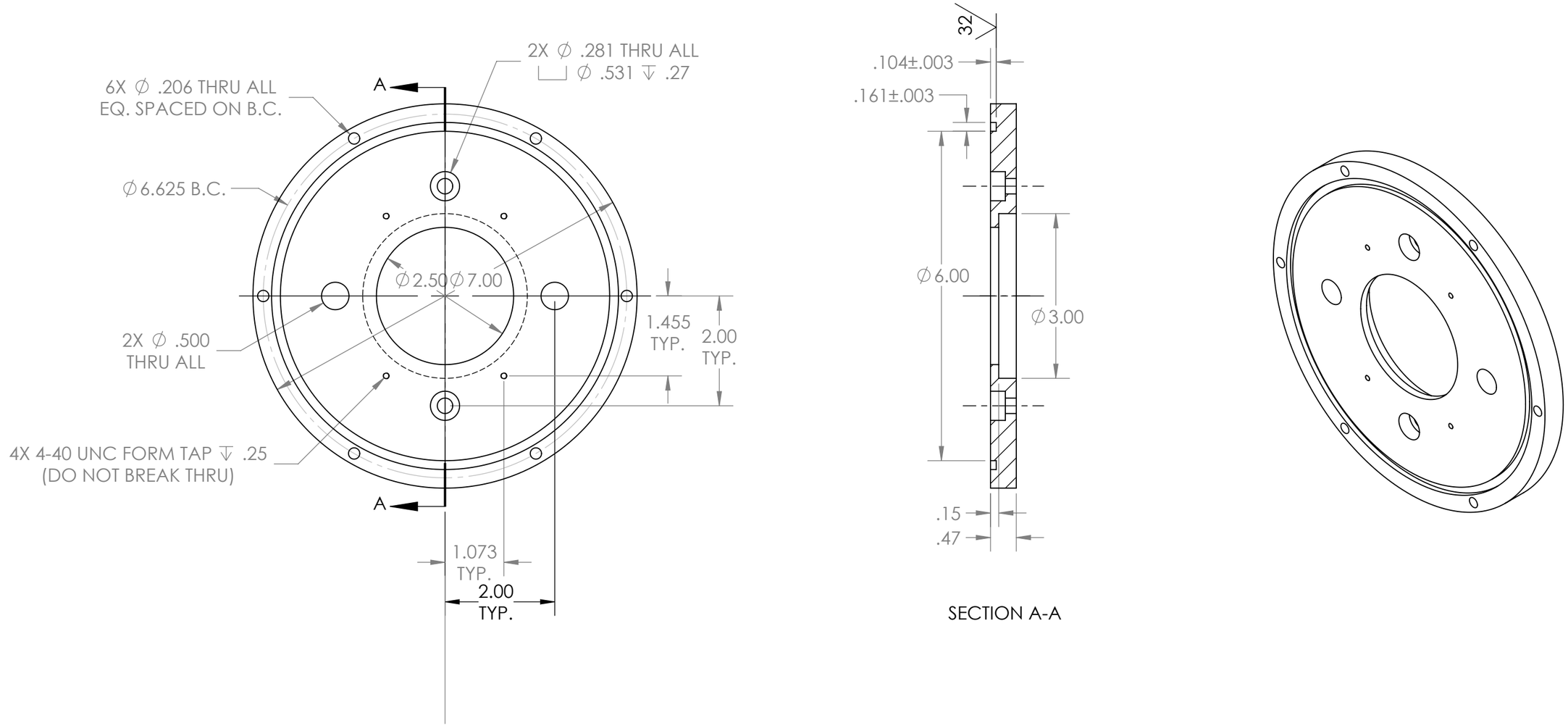

7mdx127_001	UNLESS OTHERWISE SPECIFIED: DIMENSIONS ARE IN INCHES BREAK ALL SHARP EDGES .02 MAX. REMOVE ALL BURRS 30 Deg. CHAMFER ENDS ALL THREADS MACHINE SURFACE FINISH 63 DO NOT SCALE DRAWING	National Superconducting Cyclotron Laboratory MICHIGAN STATE UNIVERSITY - East Lansing, Michigan	
		DRAWN BY C. Snow	Project / System Reference Exp. 16032 - Crider
	Dimension Tolerances: 1 Place Dec. ±.030; 2 Place Dec. ±.010; 3 Place Dec. ±.005; "Stock" ±.060; Angles ±.5°	SCALE 1:2	DATE 3/2018
			DESCRIPTION Feedthru Flange
NEXT ASSEMBLY		SIZE B	MATERIAL ALUMINUM 6061-T6
			PART # 7mdx127_002
			REV A

SHEET 1 OF 1

RELEASED TO THE NSCL DRAWING SERVER ON 2018-03-20